Installation Manual

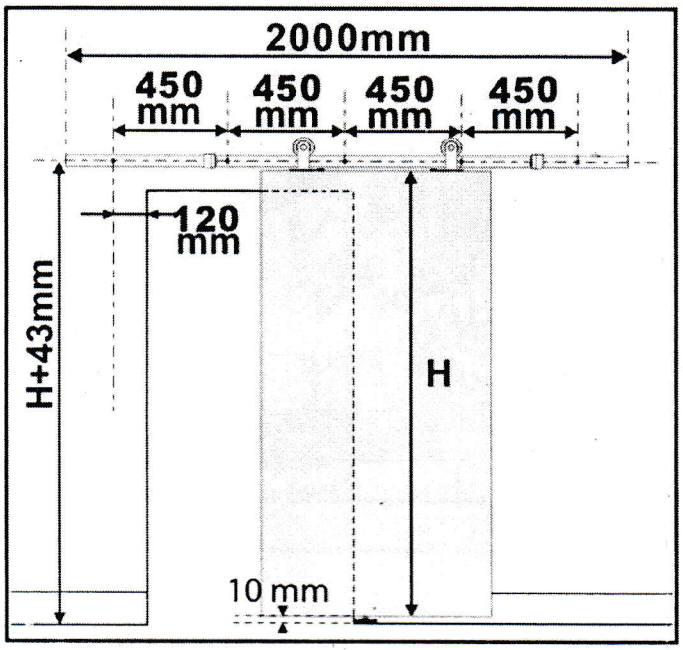

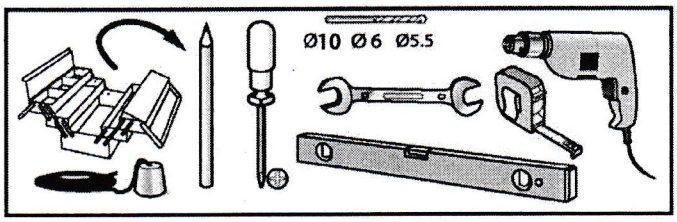

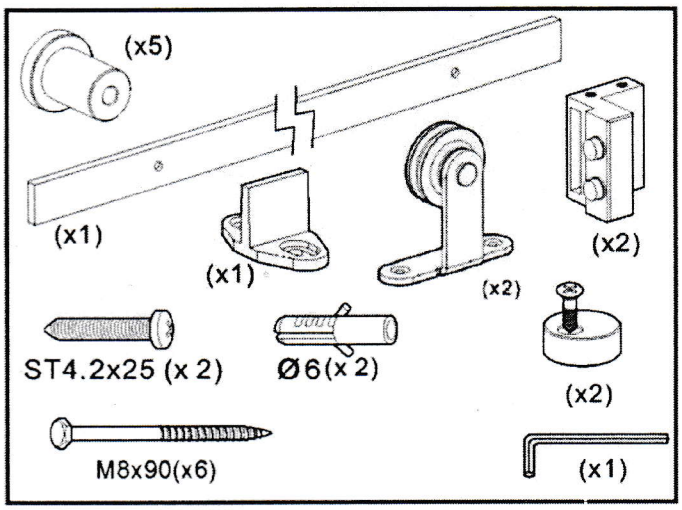

1

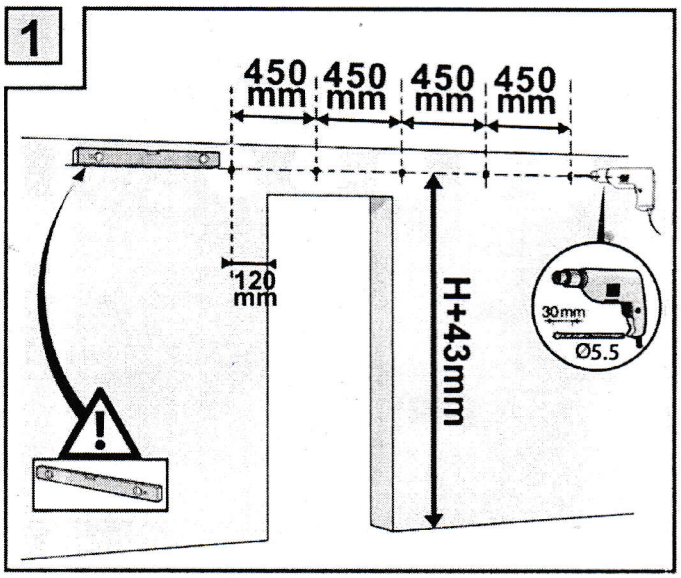

3

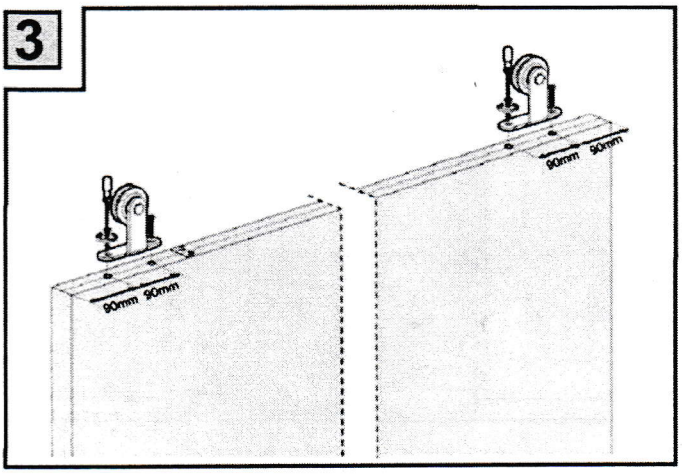

2

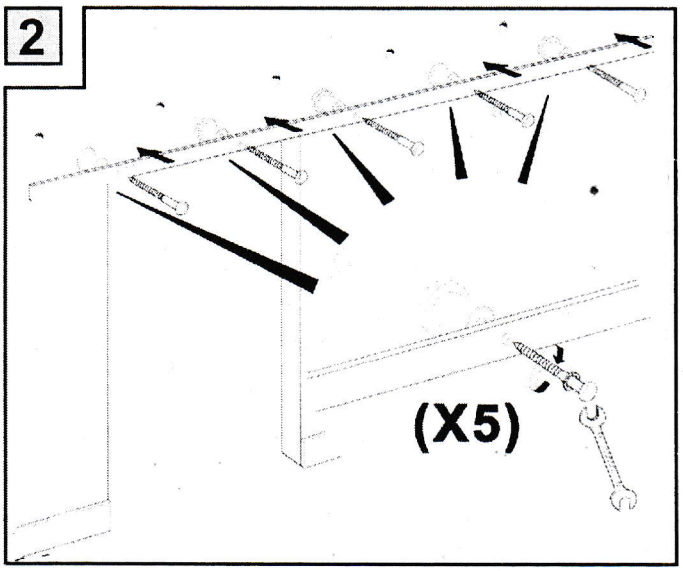

4

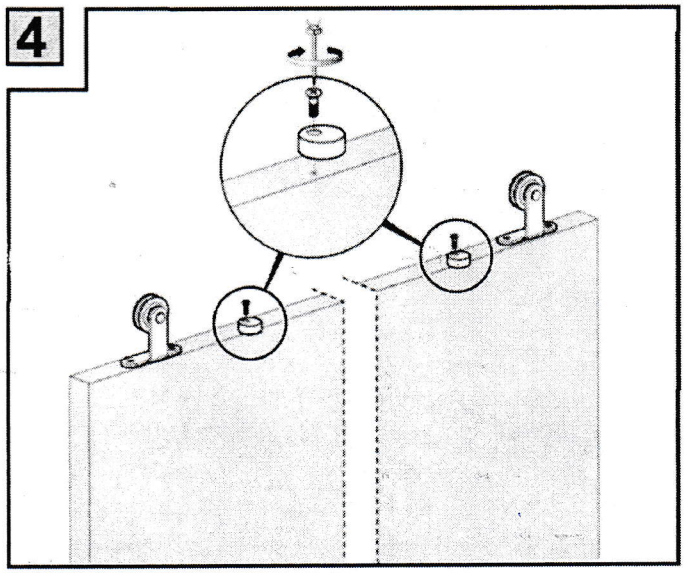

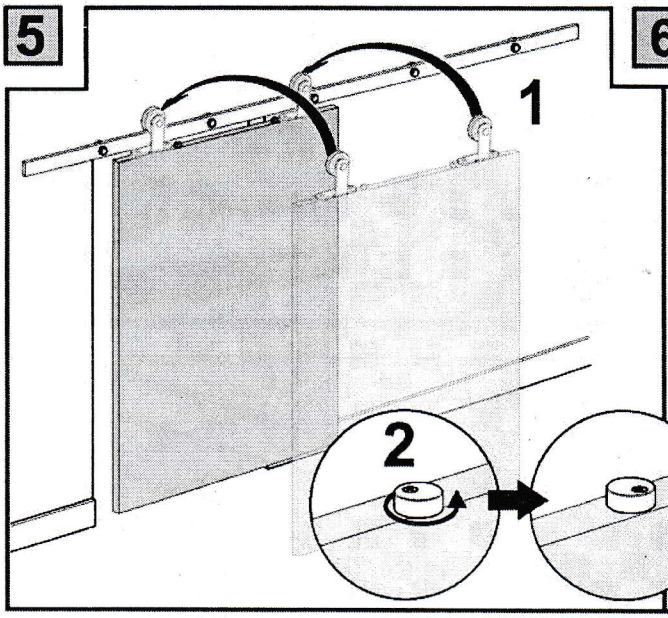
5
1
2

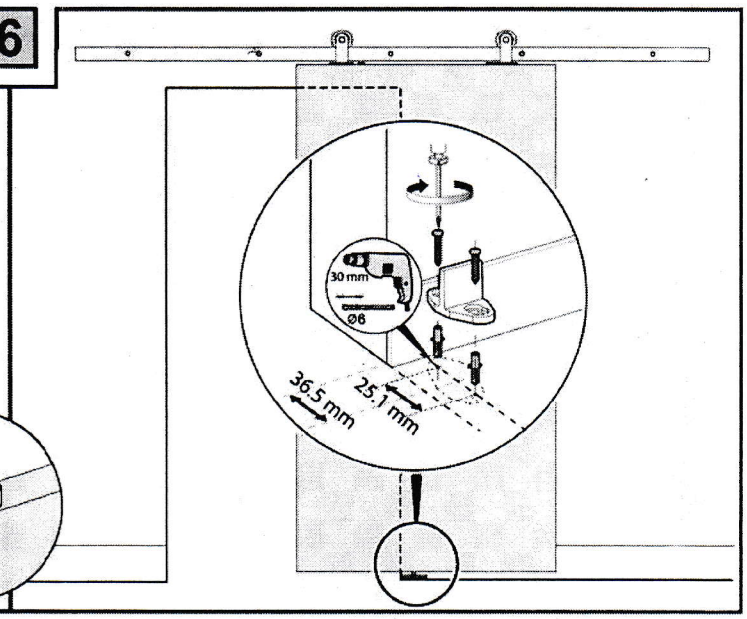
6
30 mm
Ø6
36.5 mm
25.1 mm

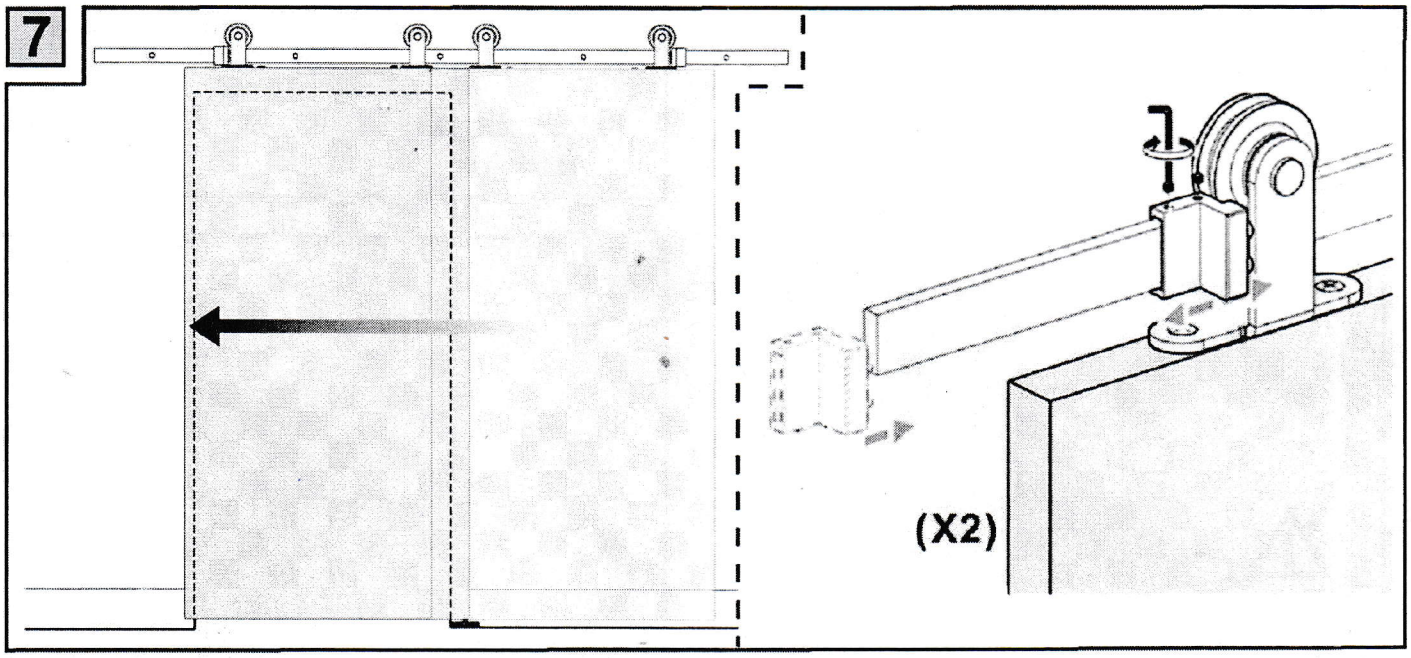
7
(X2)